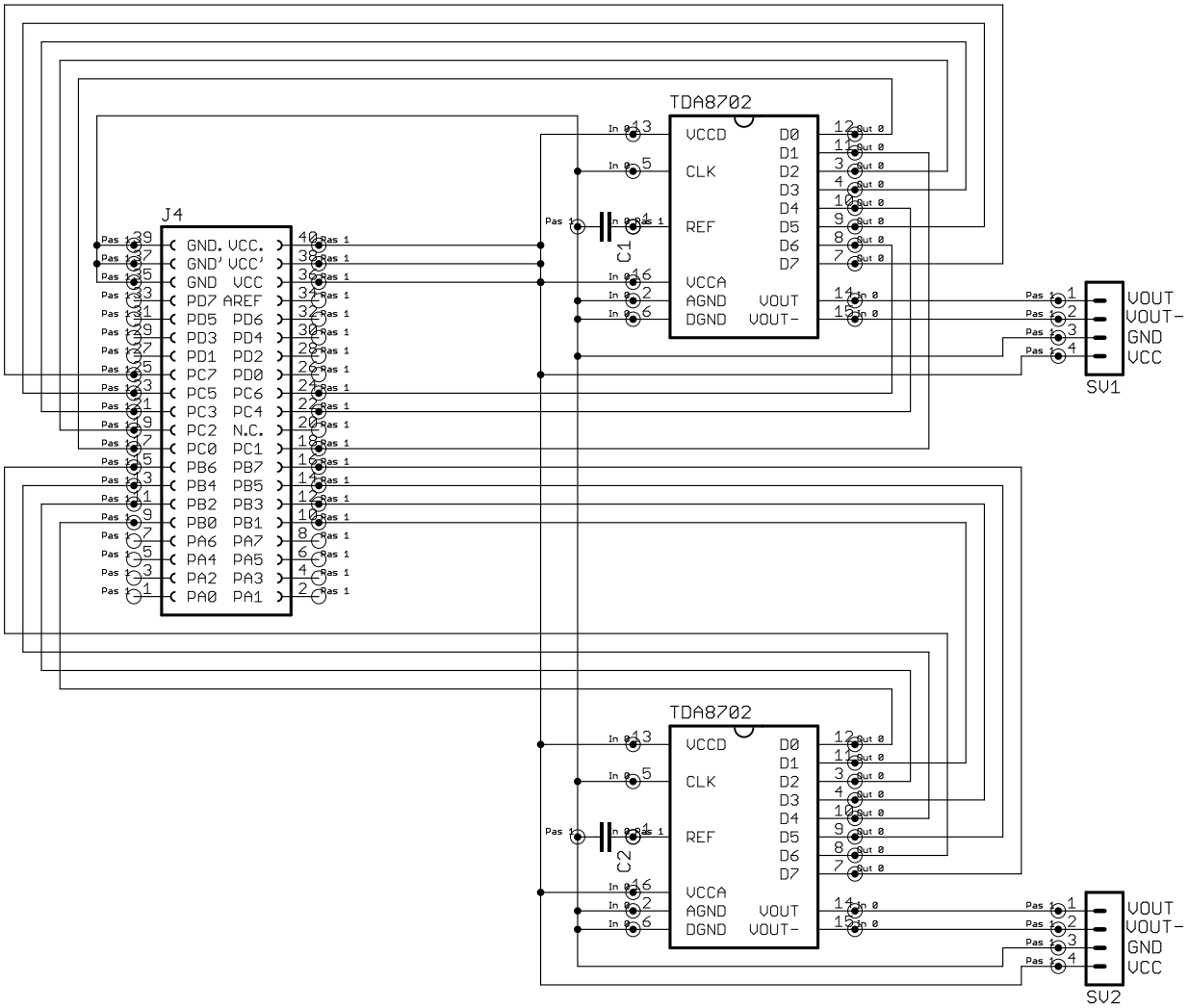
TDA8702
VCCD
CLK
REF
VCCA
AGND
DGND
D0
D1
D2
D3
D4
D5
D6
D7
VOUT
VOUT-
C1
C2
J4
GND. VCC.
GND' VCC'
GND VCC
PD7 AREF
PD5 PD6
PD3 PD4
PD1 PD2
PC7 PD0
PC5 PC6
PC3 PC4
PC2 N.C.
PC0 PC1
PB6 PB7
PB4 PB5
PB2 PB3
PB0 PB1
PA6 PA7
PA4 PA5
PA2 PA3
PA0 PA1
SV1
SV2
VOUT
VOUT-
GND
VCC